1

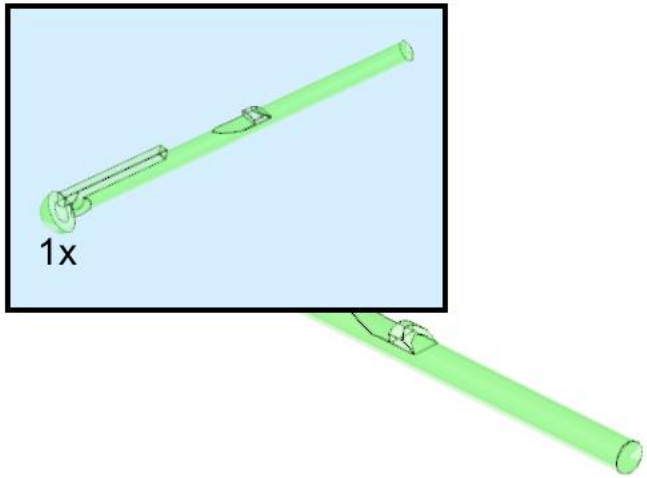


3

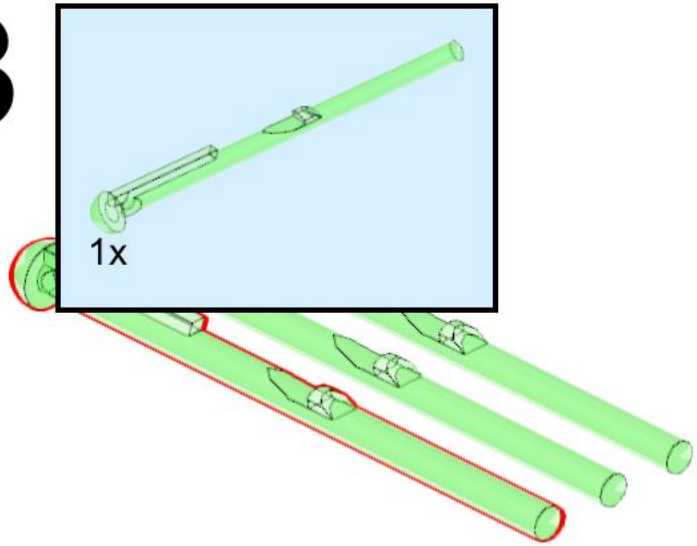


2

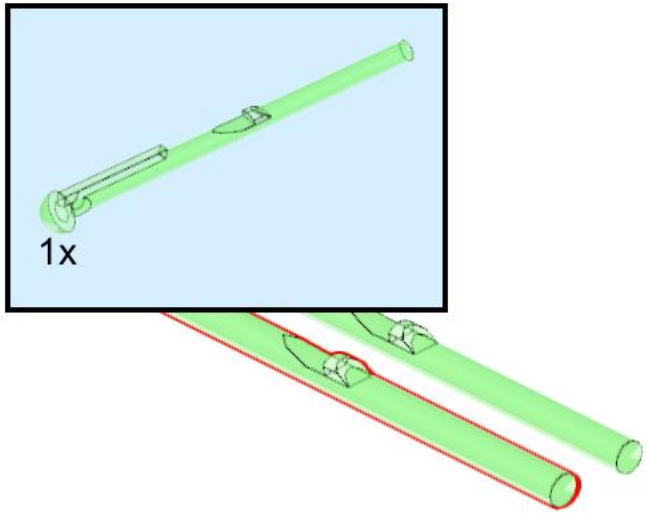


4

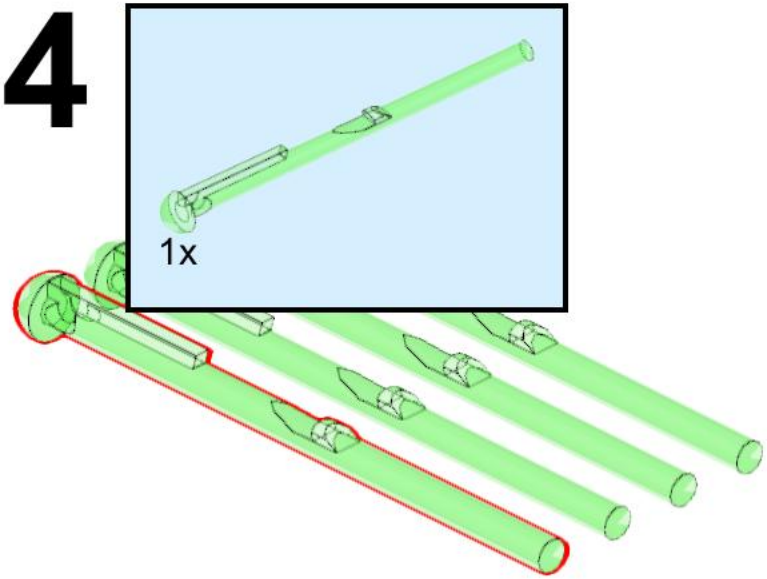

# 5

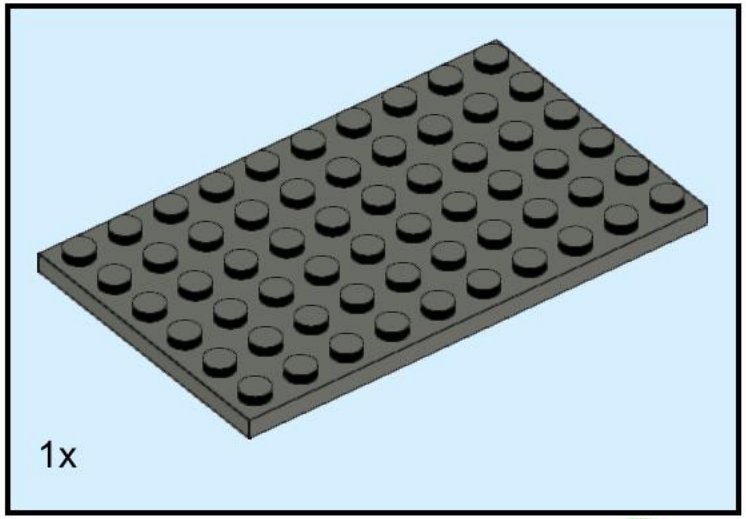


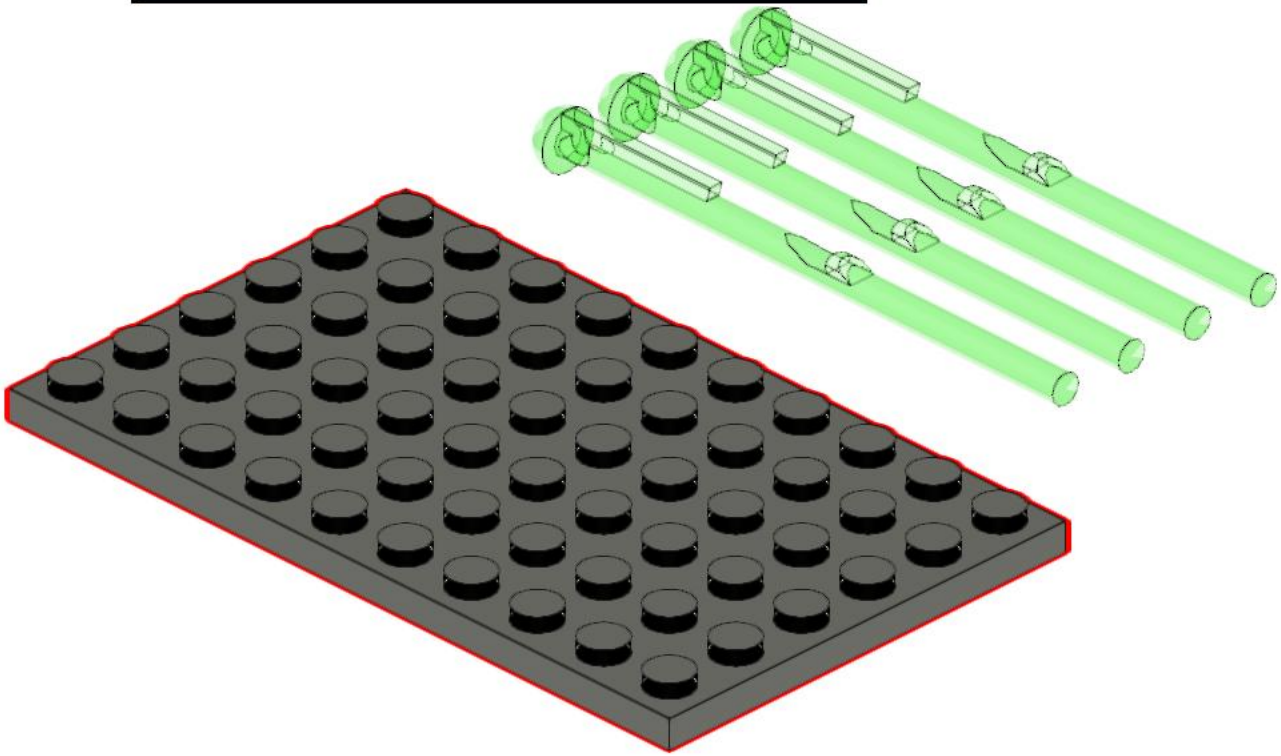

# 6

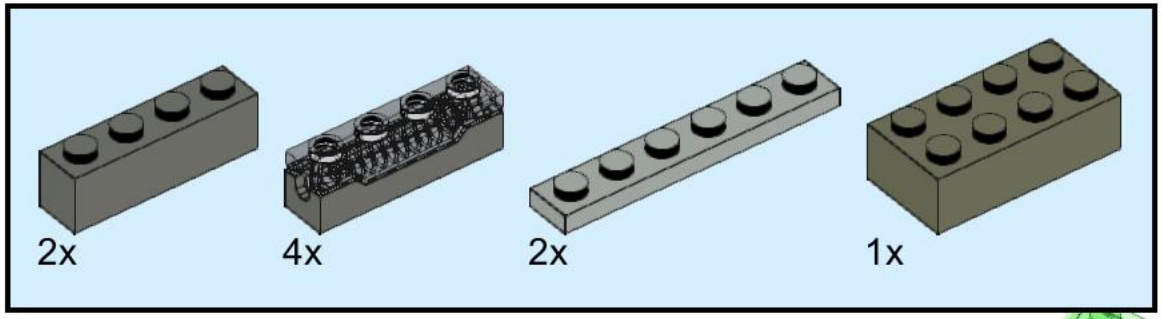


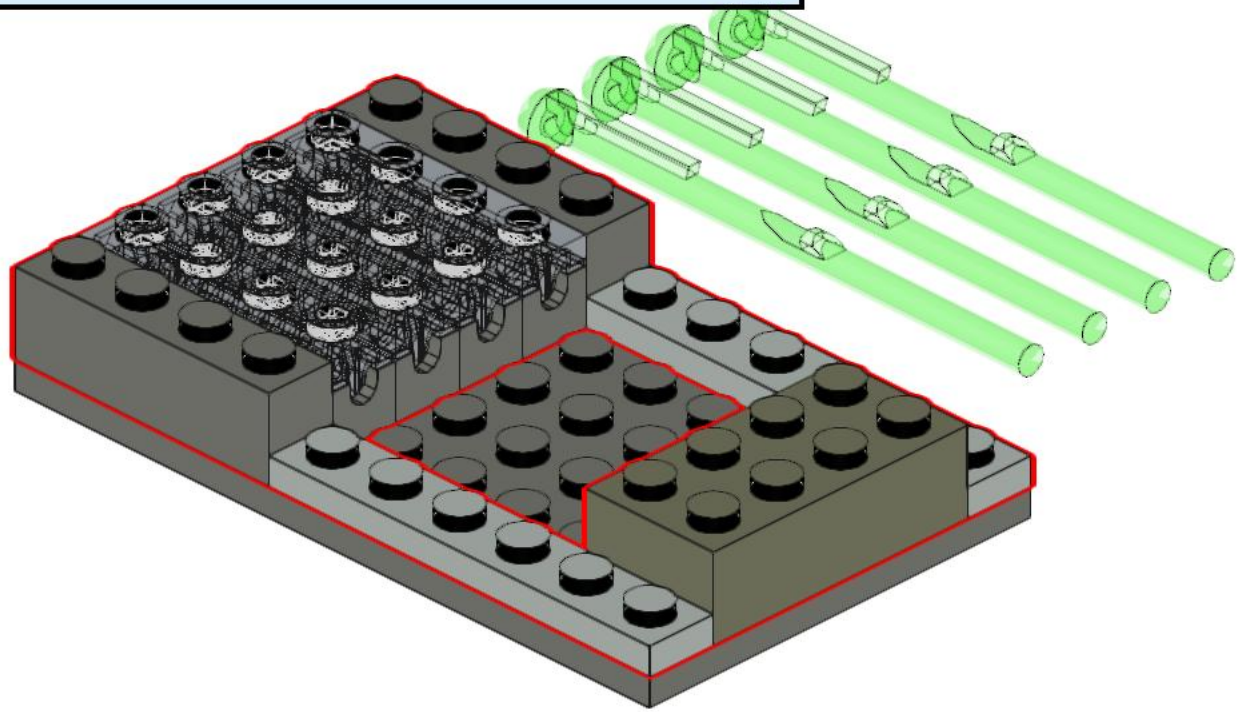

# 7

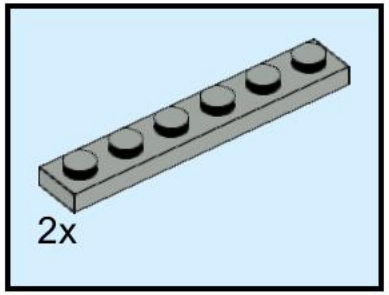


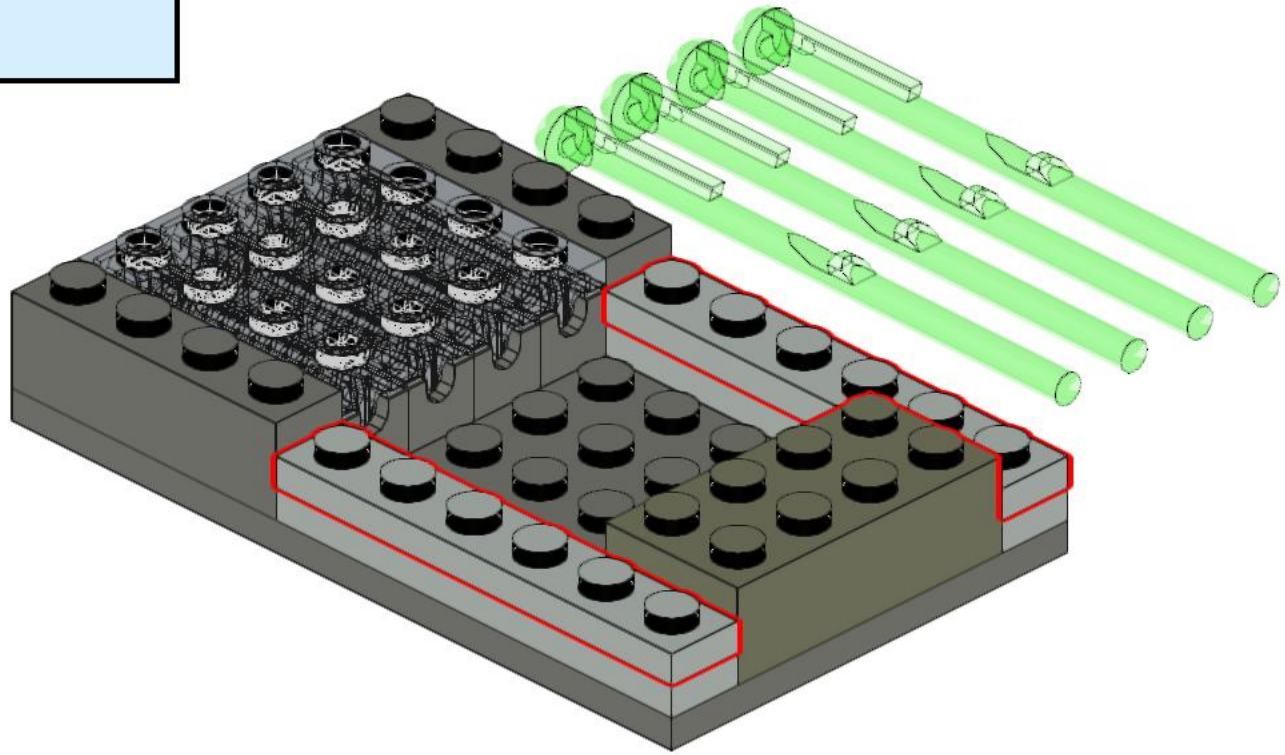

# 8

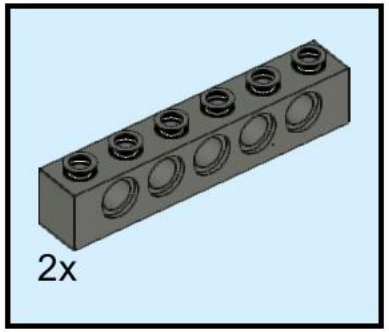


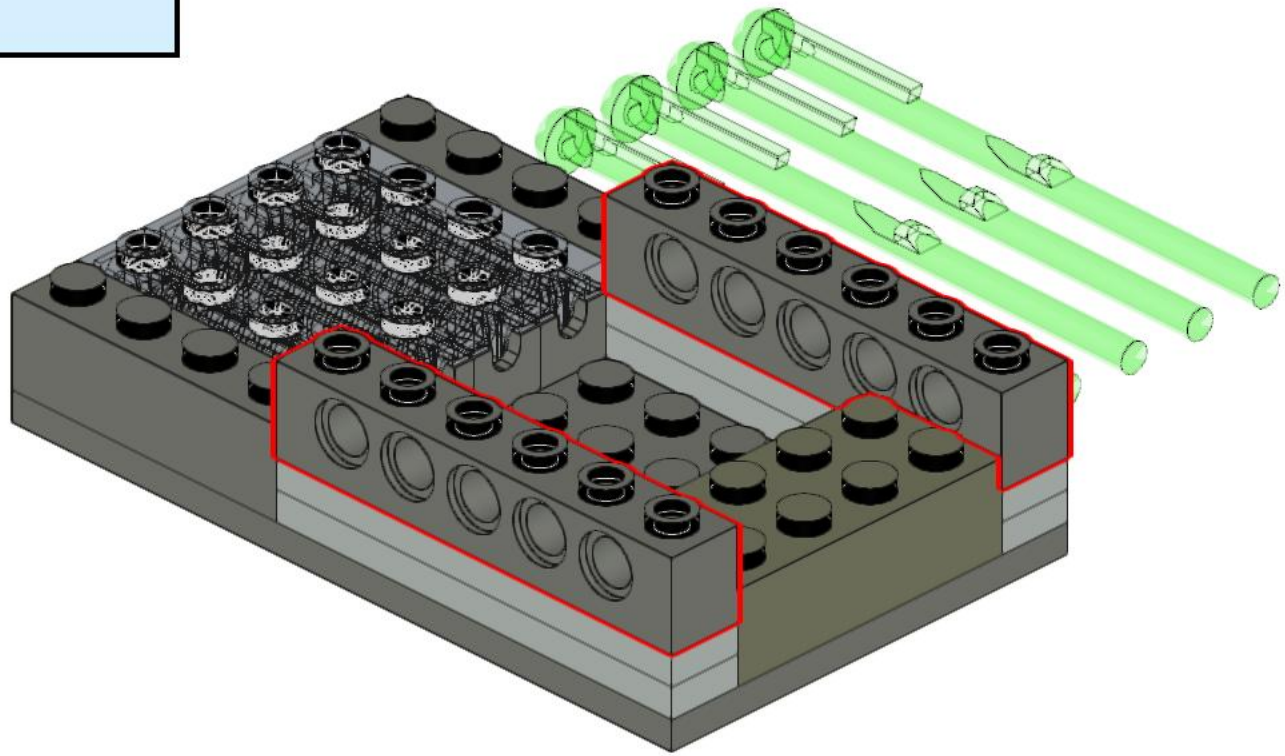

# 9

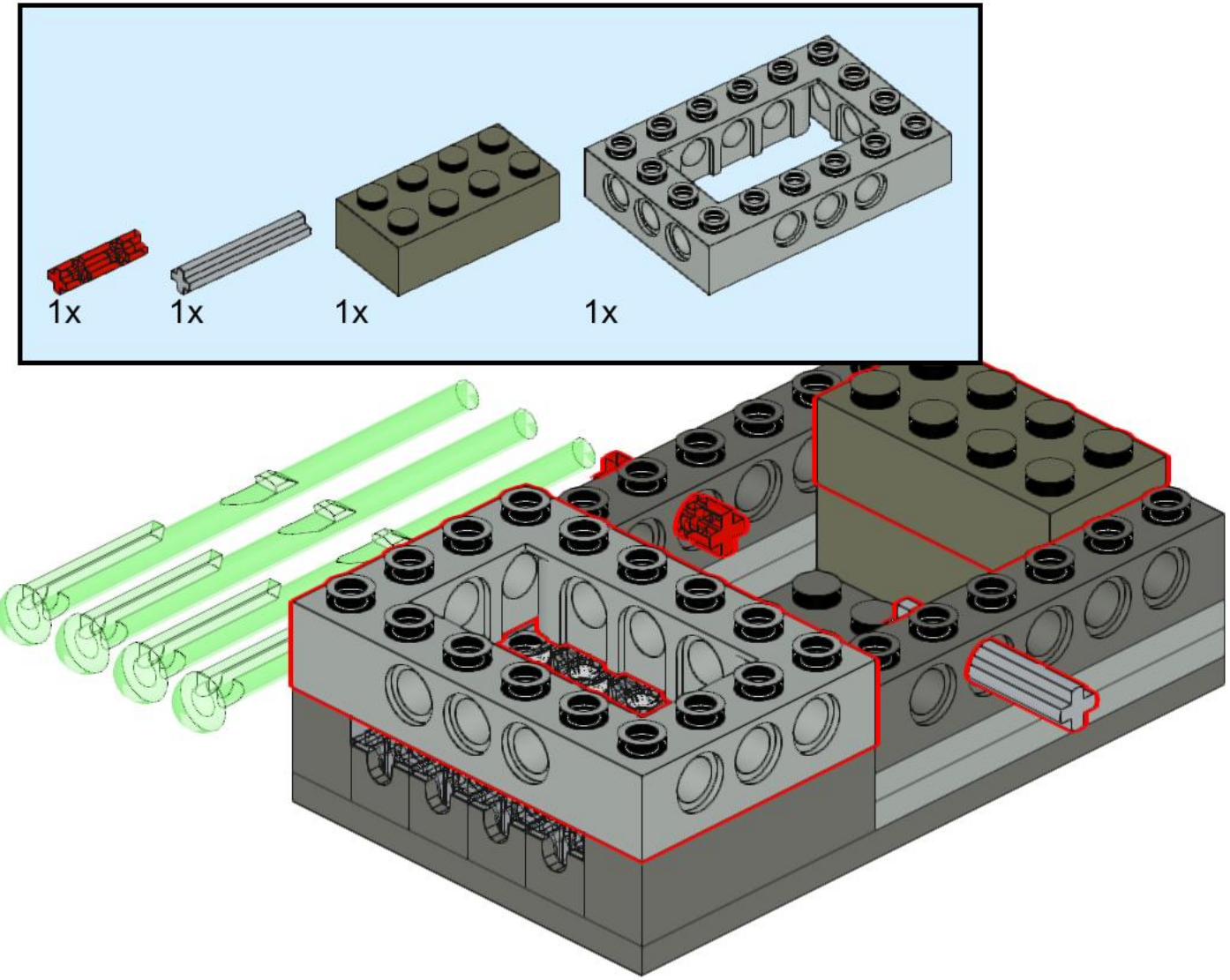

# 10

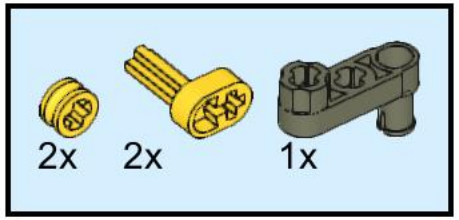


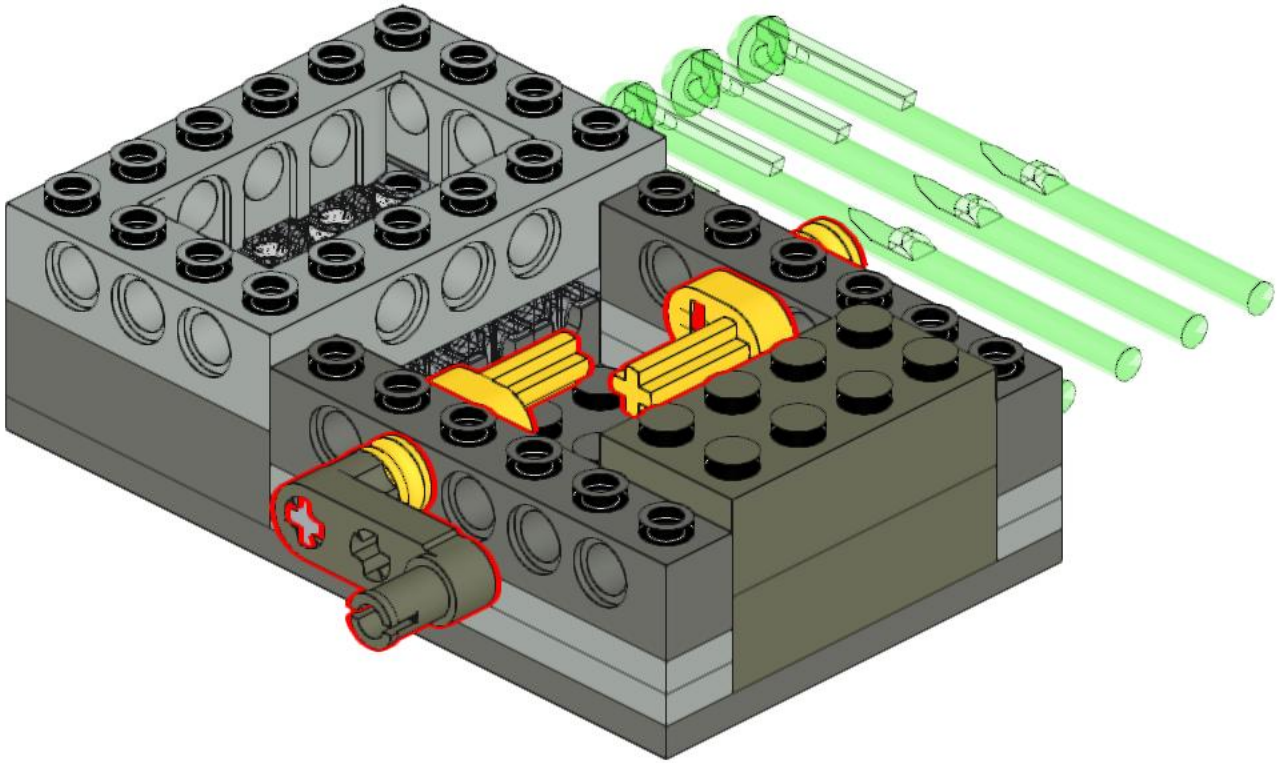

# 11

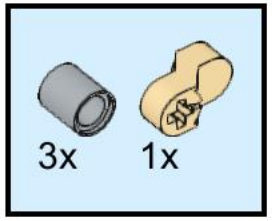


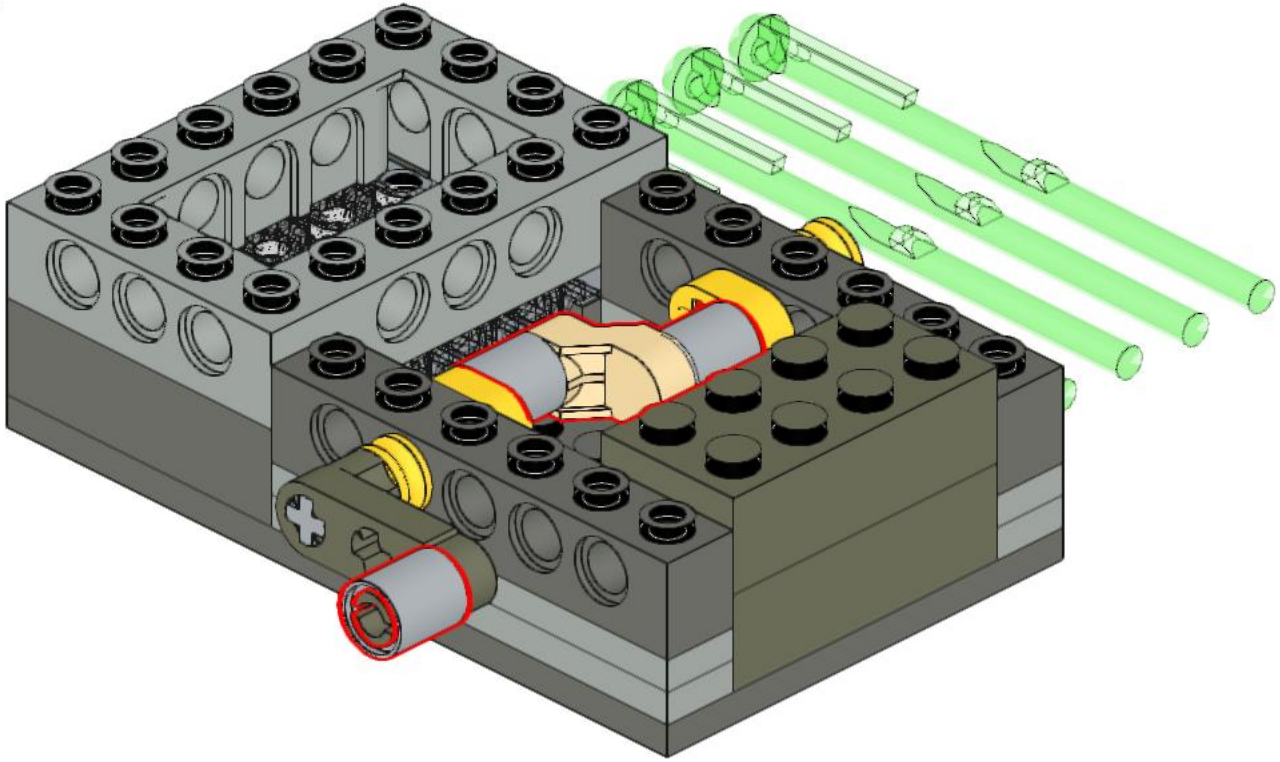

# 12

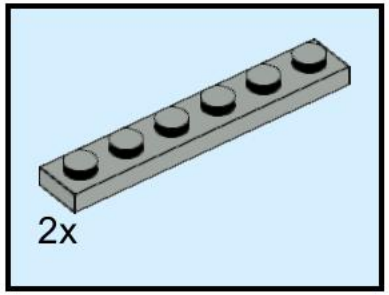


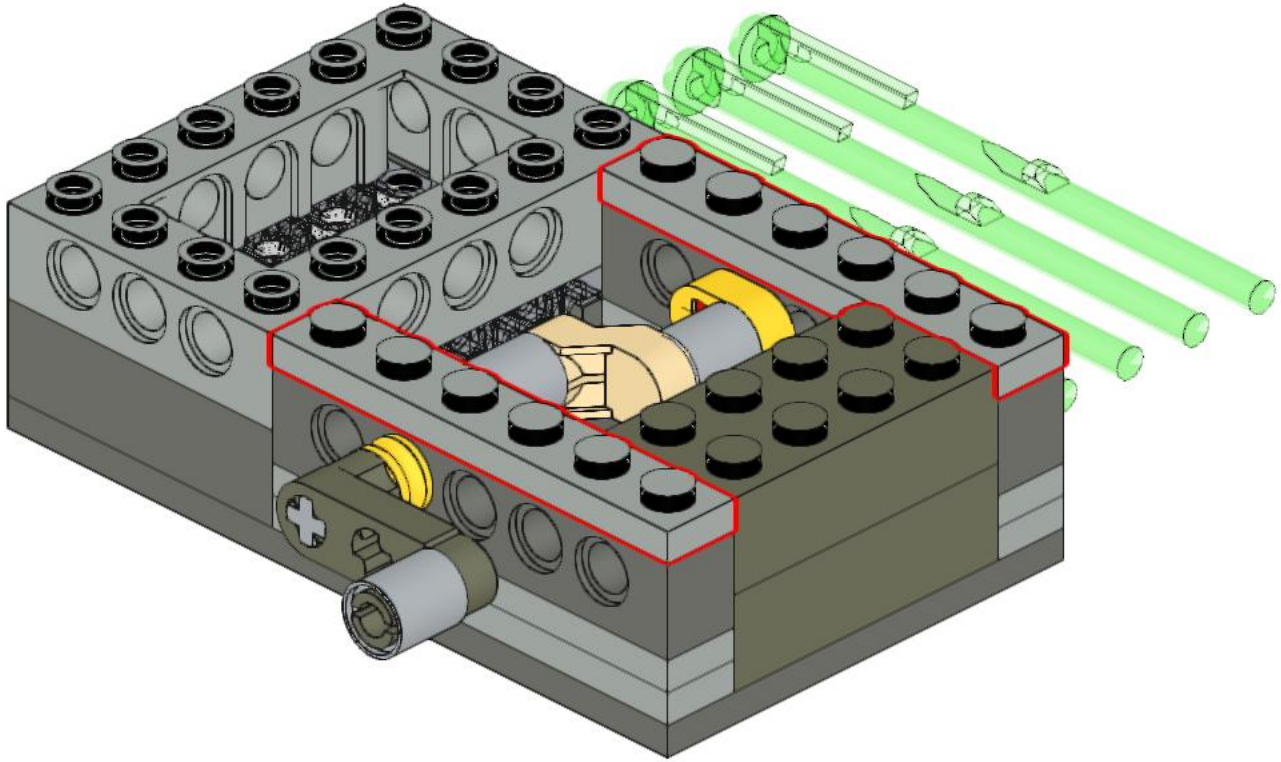

# 13

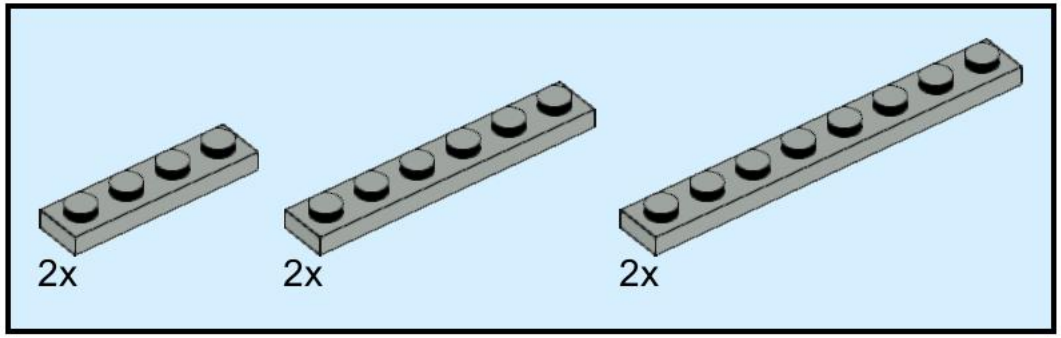


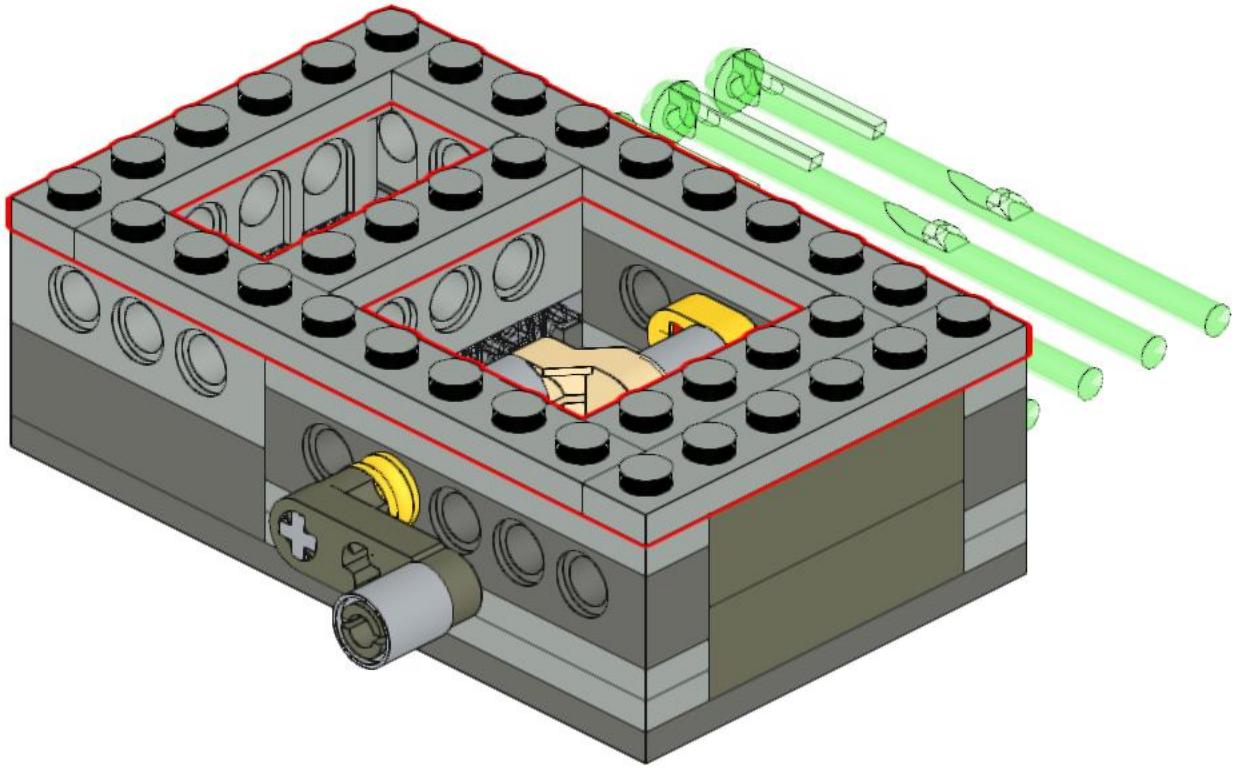

# 14

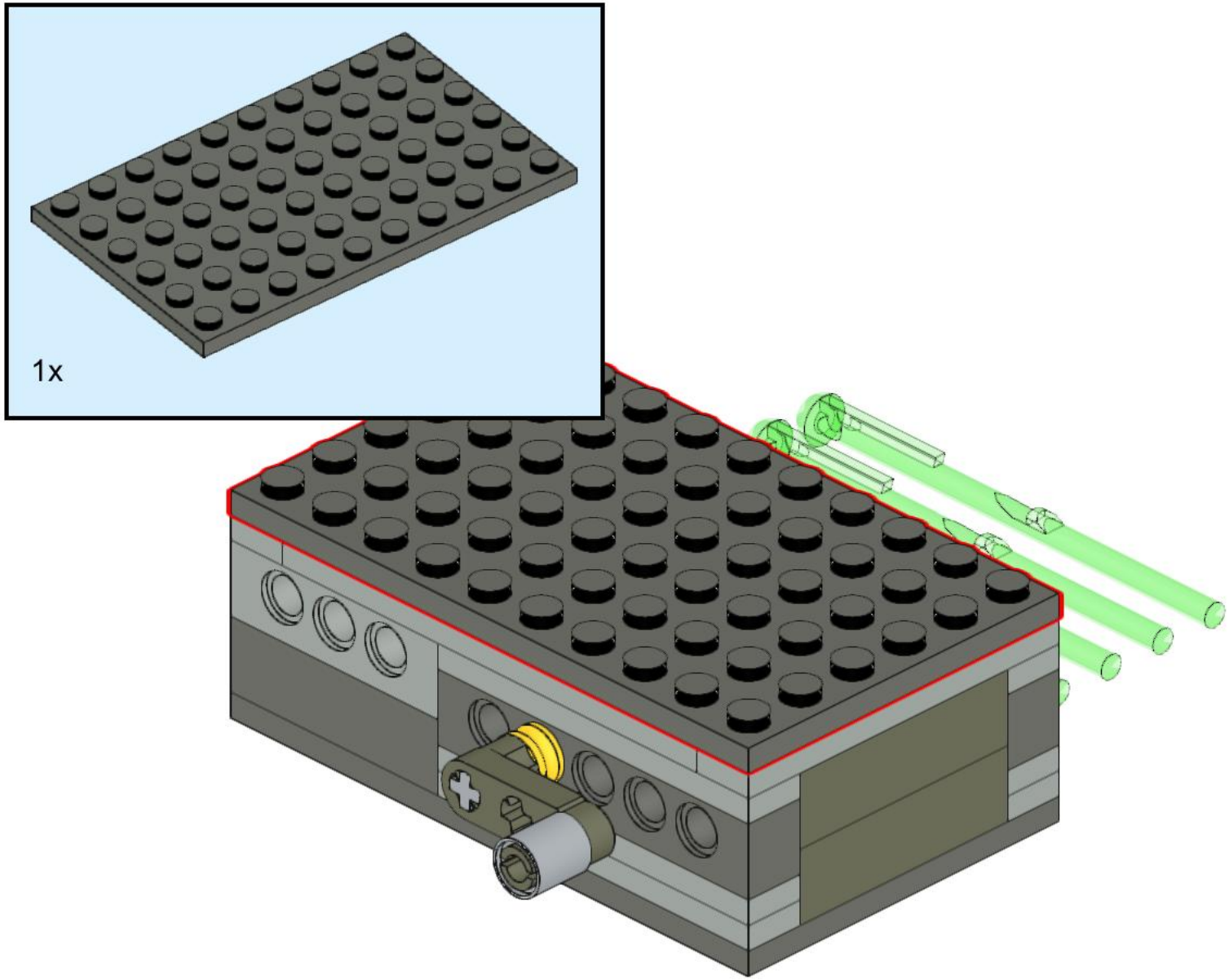

# 15

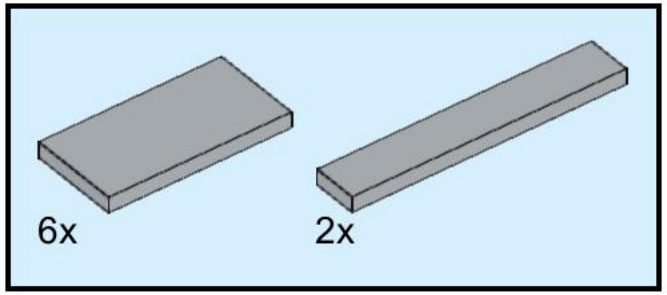


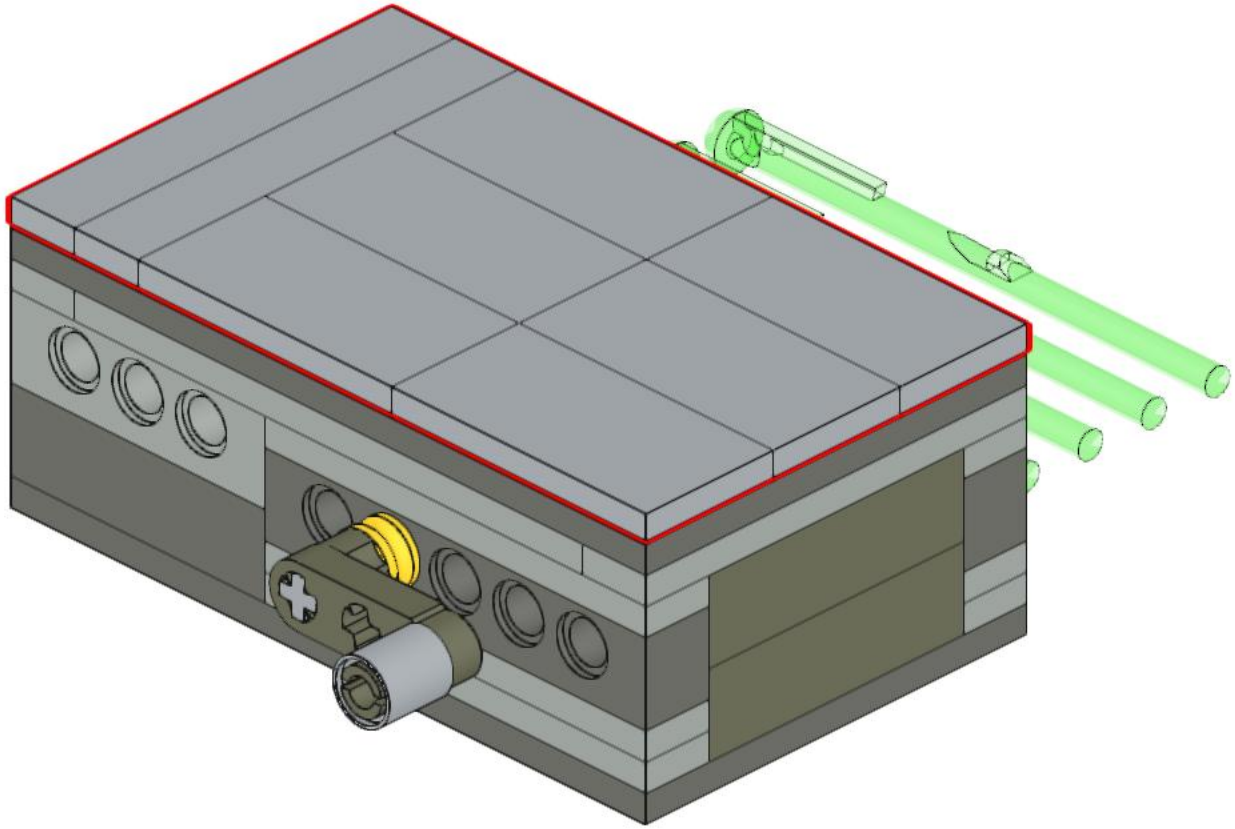

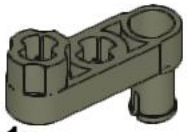

1x
33299
Dark Gray

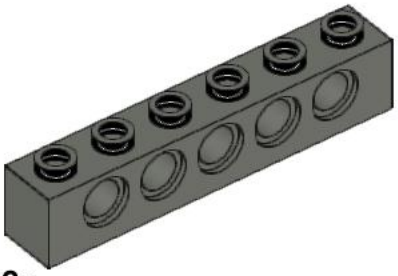

2x
3894
Dark Bluish Gray

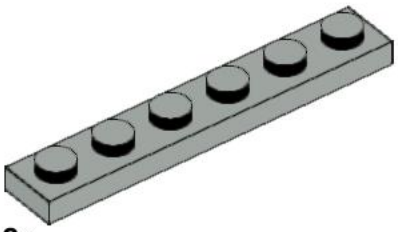

8x
3666
Light Gray

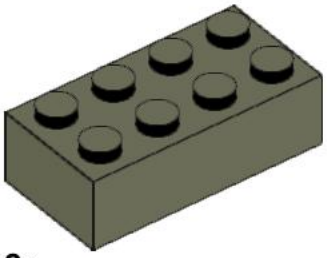

2x
3001
Dark Gray

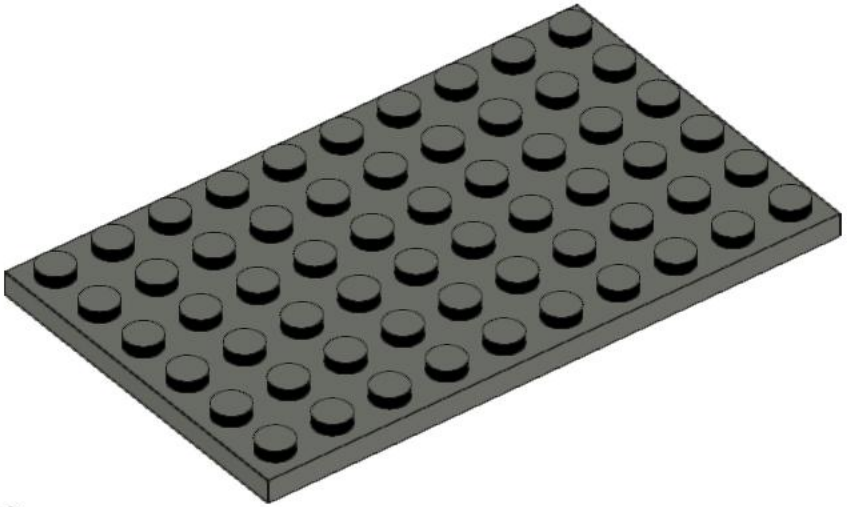

2x
3033
Dark Bluish Gray

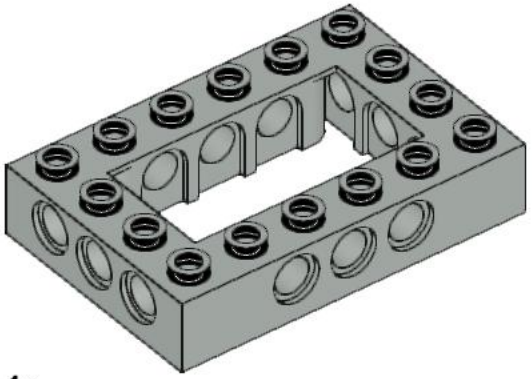

1x
32531
Light Gray

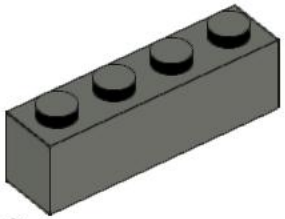

2x
3010
Dark Bluish Gray

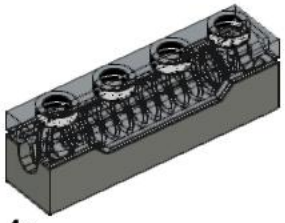

4x
15301c01
Dark Bluish Gray

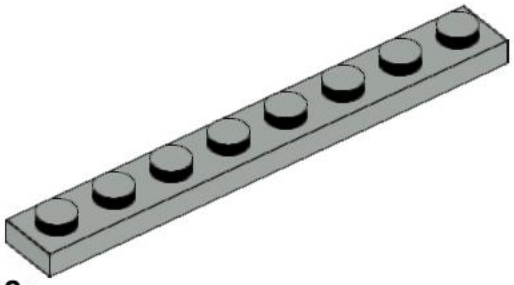

2x
3460
Light Gray

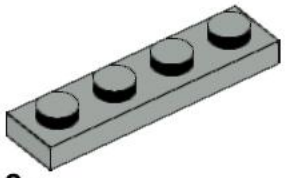

2x
3710
Light Gray

**3x**
**18654**
**Light Bluish Gray**

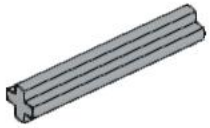

**1x**
**4519**
**Light Bluish Gray**

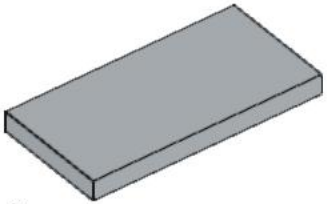

**6x**
**87079**
**Light Bluish Gray**

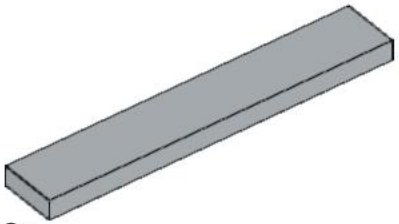

**2x**
**6636**
**Light Bluish Gray**

**1x**
**32062**
**Red**

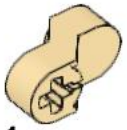

**1x**
**2854**
**Tan**

**2x**
**4265c**
**Yellow**

**2x**
**2853**
**Yellow**

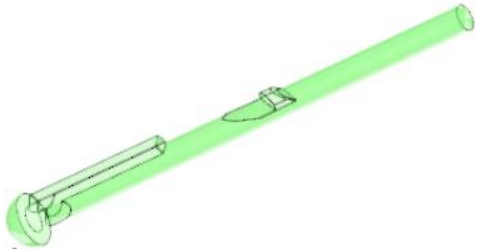

**4x**
**15303**
**Trans-Bright Green**

By MeLovesLego Productions